Wall Mount Bracket

- Aluminum and SECC Construction
- Designed for Reliability and Aesthetics

Technical Specifications

Material	Aluminum and SECC
Color	Black
Dimensions (W x H x D)	160.0 mm x 122.0 mm x 76.0 mm (6.30 in. x 4.80 in. x 2.99 in.)
Weight	0.50 kg (1.10 lb)
Load Bearing Capacity	1.0 kg (2.20 lb)
Operating Temperature	–40 °C to 60 °C (–40 °F to 140 °F)
Humidity	< 90% RH

Ordering Information

Type	Part Number	Description
Wall Mount	DH-PFB203W-B	Wall Mount Bracket, Black
Package Contents	1	Wall Mount Bracket
	3	M4 Screws
	3	ST4 Screws
	4	Plastic Anchors
	1	Hex Wrench

Dimensions (mm/in.)

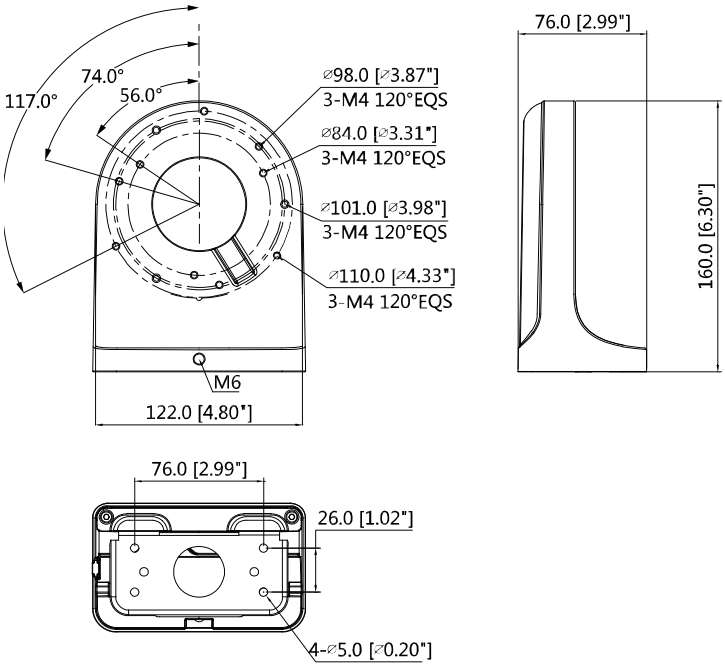

© 2019 Dahua. All rights reserved. Design and specifications are subject to change without notice.